HARRIMAN
UTILITY BOARD
Roane County, Tennessee

6" Water Main Extension
Roane & Queen Streets
Harriman, TN

LOCATION MAP
SCALE: 1" = 2000'

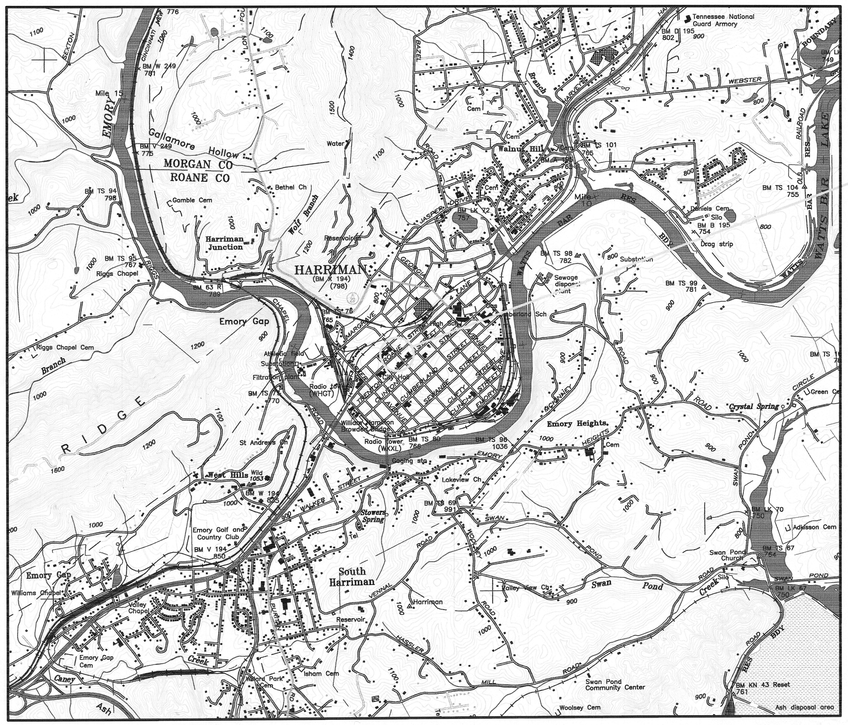

PROJECT LOCATION

General Notes

Project Engineer:
James Burnham, P.E.

Drawing By:
James Reed, Engr. Assistant

JAMES BURNHAM
No. 110388

No.	Revision/Issue	Date

Firm Name and Address

Harriman Utility Board
300 N. Roane St.
Harriman, TN 37748

Project Name and Address

6" Water Main Extension
1705 S. Roane St.
HWY. 27 / SR 61
Harriman, TN 37748

Project 6" Water Main	Sheet 1 of 3
Date 11/18/10	
Scale AS NOTED	

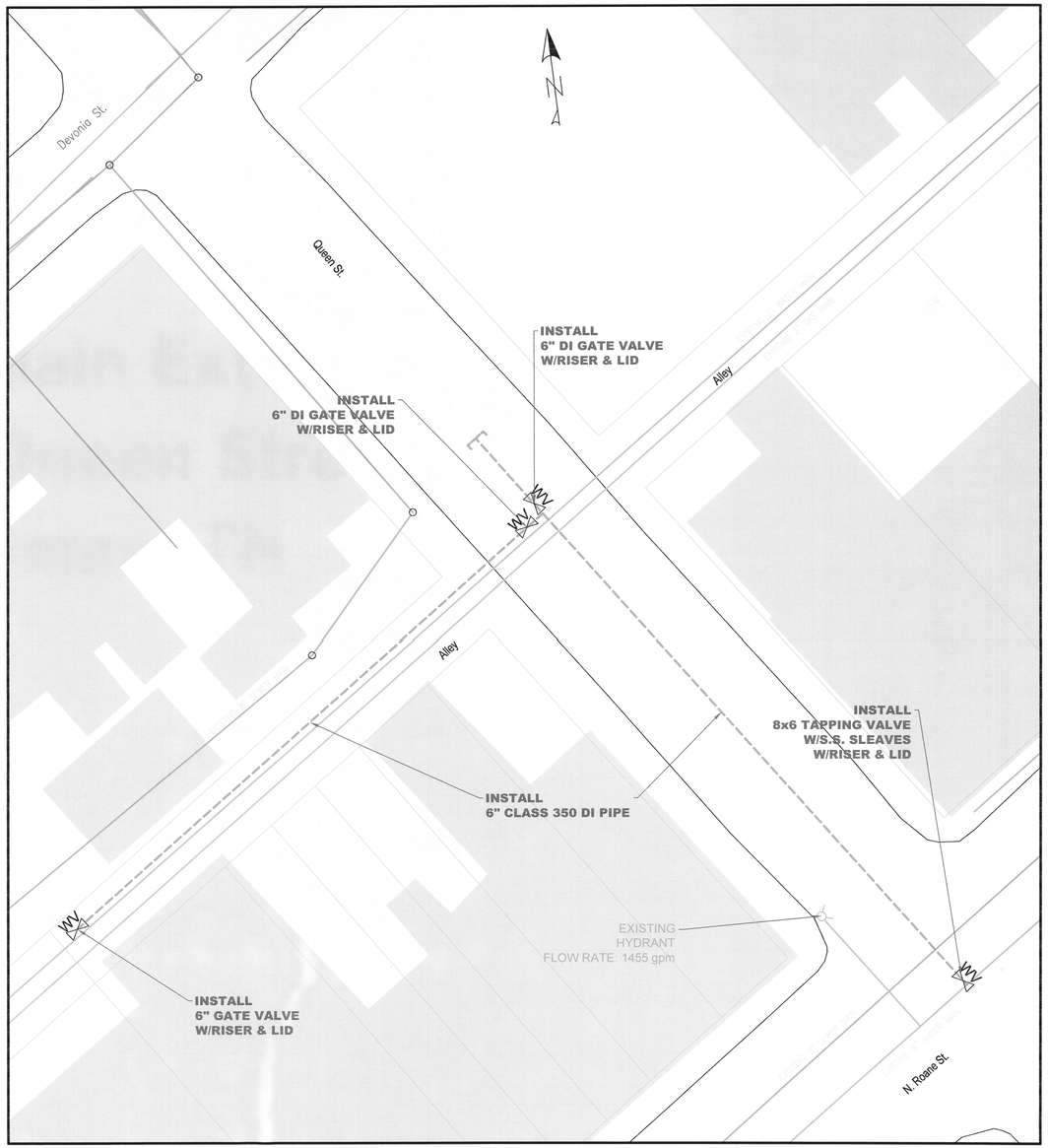

PLAN VIEW

SCALE: 1" = 20'

General Notes

SYMBOL KEY

Fire Hydrant

Proposed Water Valve

Existing Manhole

Proposed Water Line

Project Engineer:
James Burnham, P.E.

Drawing By:
James Reed, Engr. Assistant

JAMES BURNHAM
REGISTERED ENGINEER
No. 110398
STATE OF TENNESSEE

No.	Revision/Issue	Date

Firm Name and Address

Harriman Utility Board
300 N. Roane St.
Harriman, TN 37748

Project Name and Address

6" Water Main Extension
N. Roane St. & Queen St.
Harriman, TN 37748

Project: 6" Water Main	Sheet: 2 of 3
Date: 11/18/10	
Scale: AS NOTED	

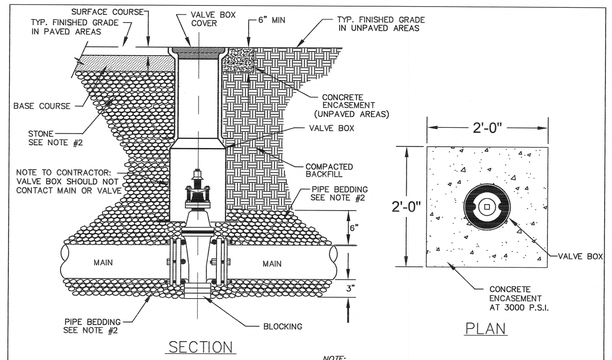

NOTE:
1. VALVE OPERATING NUT MUST BE NO MORE THAN FOUR FEET FROM THE SURFACE.
2. SEE STANDARD 6.01 FOR BEDDING/BACKFILL REQUIREMENTS.

STANDARD VALVE BOX INSTALLATION

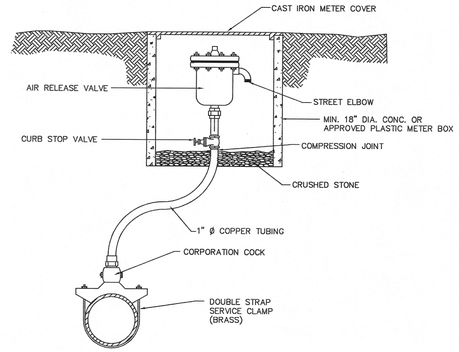

AIR RELEASE VALVE

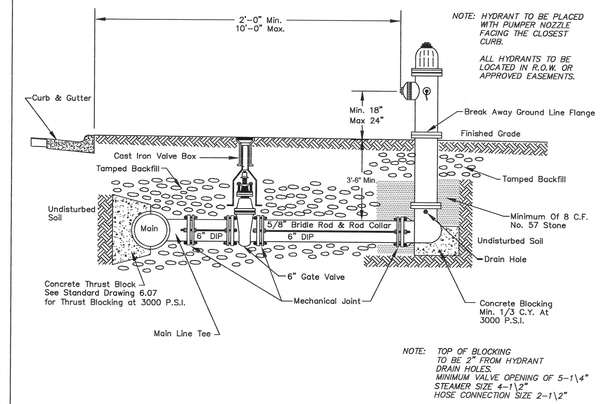

NOTE: HYDRANT TO BE PLACED WITH RUMPER NOZZLE FACING THE CLOSEST CURB.

ALL HYDRANTS TO BE LOCATED IN R.O.W. OR APPROVED EASEMENTS.

NOTE: TOP OF BLOCKING TO BE 2" FROM HYDRANT DRAIN HOLES.
MINIMUM VALVE OPENING OF 5-1\4"
STEAMER SIZE 4-1\2"
HOSE CONNECTION SIZE 2-1\2"

STANDARD FIRE HYDRANT INSTALLATION

General Notes

Project Engineer:
James Burnham, P.E.

Drawing By:
James Reed, Engr. Assistant

No.	Revision/Issue	Date

Firm Name and Address

Harriman Utility Board
300 N. Roane St.
Harriman, TN 37748

Project Name and Address

6" Water Main Extension
N. Roane St. & Queen St.
Harriman, TN 37748

Project: 6" Water Main

Date: 11/18/10

Scale: NOT TO SCALE

Sheet: 3 of 3

*** ALL WATER LINES WITHIN THREE FEET OF BACK OF CURB MEASURED FROM CENTER LINE OF PIPE SHALL BE BACKFILLED ABOVE EMBEDMENT MATERIAL TO WITHIN ONE FOOT OF FINISHED GROUND ELEVATION WITH NO. 57 STONE.

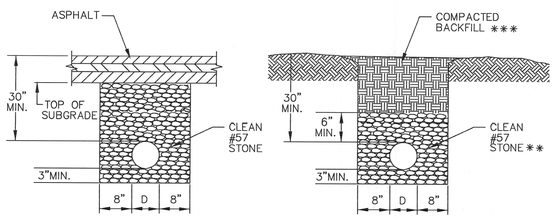

NEW PAVED AREAS *

UNPAVED AREAS (PVC PIPE)

* SEE STANDARD DRAWING 5.01 FOR INSTALLATION UNDER EXISTING ROADWAYS.

** DUCTILE IRON PIPE MAY OPTIONALLY BE BEDDED WITH CLASS I, II, OR III MATERIALS IN ACCORDANCE WITH ASTM D2321.

BACKFILLING & COMPACTION OF WATER LINES

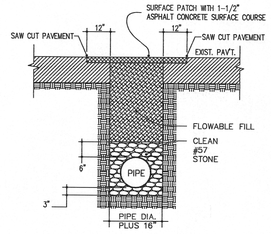

ASPHALT PAVEMENT

NOTE TO CONTRACTOR:

ALL PAVEMENT CUTS SHALL BE REPAIRED WITHIN A MAXIMUM OF THREE (3) DAYS FROM THE DATE THE CUT IS MADE. IF CONDITIONS DO NOT PERMIT A PERMANENT REPAIR WITHIN THE GIVEN TIME LIMIT, PERMISSION TO MAKE A TEMPORARY REPAIR MUST BE OBTAINED FROM THE PUBLIC WORKS DIRECTOR.

STANDARD TRENCH AND PAVEMENT REPAIR SECTION

TABLE OF DIMENSIONS FOR CONCRETE BLOCKING–HORIZONTAL BENDS

	90 DEGREE					45 DEGREE					22 1/2 DEGREE					11 1/4 DEGREE					TEES AND PLUGS				
PIPE SIZE	H1	H2*	V	D	CU.FT.	H1	H2*	V	D	CU.FT.	H1	H2*	V	D	CU.FT.	H1	H2*	V	D	CU.FT.	H1	H2*	V	D	CU.FT.
3"	18"	10"	12"	8"	0.71	14"	5.5"	9"	8"	0.40	10"	5.5"	7"	8"	0.27	7"	5.5"	5"	8"	0.19	16"	10"	10"	8"	0.58
4"	24"	12"	16"	8"	1.16	18"	7"	12"	8"	0.66	13"	7"	9"	8"	0.43	9"	7"	6"	8"	0.28	21"	12"	14"	8"	0.95
6"	36"	15"	24"	11"	3.31	27"	9"	18"	9"	1.54	19"	9"	13"	8"	0.81	14"	9"	9"	8"	0.53	31"	15"	21"	8"	1.92
8"	48"	16"	32"	16"	8.13	36"	10"	24"	13"	3.76	26"	10"	17"	8"	1.33	18"	10"	12"	8"	0.81	41"	17"	27"	12"	4.66
10"	60"	20"	40"	20"	15.72	45"	12"	30"	16"	7.12	32"	12"	21"	10"	2.48	23"	12"	15"	8"	1.22	51"	20"	41"	16"	11.14
12"	72"	22"	48"	25"	27.83	53"	13"	36"	20"	12.36	38"	13"	26"	13"	4.56	27"	13"	18"	8"	1.63	61"	22"	41"	20"	16.73

BASED ON 1000 PSF SOIL BEARING VALUE AND 150 PSI WATER PRESSURE IN PIPE W/NO SF
* DIMENSIONS FOR STANDARD FITTINGS SHOWN. MODIFY COMPACT FITTINGS
ALL CONCRETE TO BE 3000# (28 DAY STRENGTH). NO CONCRETE SHALL COVER BOLTS OR GLANDS.

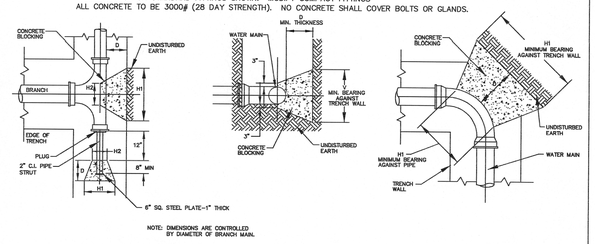

STANDARD REACTION BLOCKING–HORIZONTAL BEND

GRAVITY BLOCKING VOLUMES FOR VERTICAL BENDS(CU. FT.)
Based on 150 psi pressure and 140 pcf concrete

Pipe Size	45 Deg Bends	22 1/2 Deg Bends	11 1/4 Deg Bends	Area Pipe(Sq. In.)
3"	5.36	2.90	1.48	7.0686
4"	9.52	5.15	2.63	12.5664
6"	21.42	11.59	5.91	28.2743
8"	38.08	20.61	10.51	50.2655
10"	59.50	32.20	16.42	78.5398
12"	85.68	46.37	23.64	113.0973

HORIZONTAL THRUST IN POUNDS FOR 150 PSI WATER PRESSURE @ VERTICAL BENDS
Provide adequate bearing area to resist Horizontal Thrust

Pipe Size	45 Deg Bends	22 1/2 Deg Bends	11 1/4 Deg Bends	Area Pipe(Sq. In.)
3"	311	81	20	7.0686
4"	552	143	36	12.5664
6"	1242	323	81	28.2743
8"	2208	574	145	50.2655
10"	3451	897	226	78.5398
12"	4969	1291	326	113.0973

MINIMUM AREA(Sq. Ft.) REQ'D. TO RESIST HORIZONAL THRUST @ VERTICAL BENDS
Based on 1000 psf Soil Bearing Value & 150 psi Water Pressure

Pipe Size	45 Deg Bends	22 1/2 Deg Bends	11 1/4 Deg Bends
3"	0.31	0.08	0.02
4"	0.55	0.14	0.04
6"	1.24	0.32	0.08
8"	2.21	0.57	0.14
10"	3.45	0.90	0.23
12"	4.97	1.29	0.33

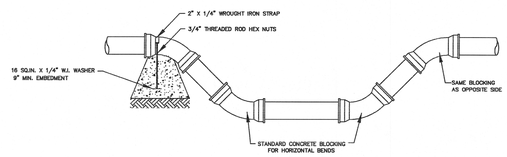

STANDARD REACTION BLOCKING–VERTICAL BEND

For providing valves and connections for both fire line and domestic meter

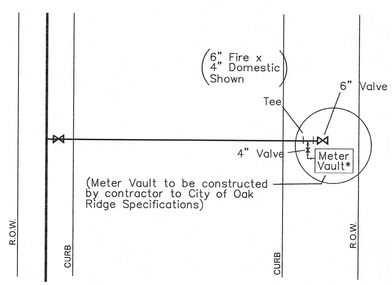

*SEE METER VAULT DETAIL–STANDARD DETAIL 6.10

COMMERCIAL WATER LATERAL LAYOUT/METER VAULT

SIZE	2"	3"	4"	6"	8"
Min. Size Access Dia.	24"	24"	24"	30"	36"
Min. Size Access Rec.	14"x22"	14"x22"	14"x22"	20"x22"	24"x32"
A	86"	88"	91"	114"	120"
B	68"	68"	72"	78"	78"
C	36"	39"	41-1/2"	45-1/2"	34-1/2"
D	--	"	--	--	--
E	4-1/2"	8"	9"	10-1/2"	11-1/2"
F	2-1/4"	4"	5"	6"	7-1/2"
G (OPEN)	14-1/2"	22-1/16"	25"	32-3/4"	41-1/2"
H	17-11/16"	20"	24"	30"	30"
J	42-7/8"	62"	73"	90"	96-1/2"
K	8-3/16"	10-1/2"	12-3/4"	17"	20-1/4"
# L (STRAINER)	8-1/2"	8-1/2"	9"	9"	--

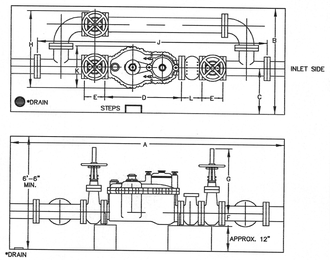

"D" DIMENSIONS

2" METER
ROCKWELL 15-1/2"
BADGER 17"
NEPTUNE 17"
HERSEY 17"

3" METER
ROCKWELL 17"
BADGER 17"
NEPTUNE 17"
HERSEY 24"

4" METER
ROCKWELL 20"
BADGER 24"
NEPTUNE 20"
HERSEY 29"

6" METER
ROCKWELL 24"

COVER

COVER WILL BE OF EITHER 1/2" PLATE STEEL OR 4" REINFORCED CONCRETE.

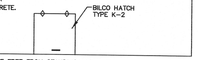

*THE METER PIT MUST BE DESIGNED AND INSTALLED TO BE FREE FROM STANDING WATER. EITHER A PIPED GRAVITY FLOW DRAIN OR AN ELECTRIC SUMP PUMP MUST BE PROVIDED.
#VERIFY STRAINER LENGTHS PRIOR TO ACTUAL PLUMBING INSTALLATION.

METER VAULT